Slack adjuster setup and compliance to the NHVIM

AUSTRALIAN TRUCKING ASSOCIATION

Technical Advisory Procedure

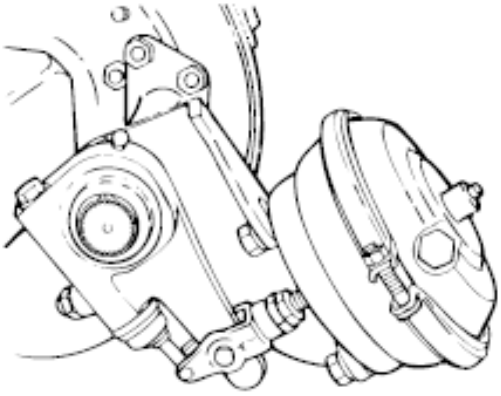

Developed by the ATA Industry Technical Council
First edition - September 2016

About this Technical Advisory Procedure (TAP):

This Technical Advisory Procedure is published by the Australian Trucking Association Ltd (ATA) to assist the road transport industry to improve commercial vehicle safety by clarifying the adjustment and setup of slack adjustors used in combination with drum brakes.

This TAP is not, nor is it intended to be, complete or without exceptions.

The Technical Advisory Procedure is a guide only, and its use is entirely voluntary. Recommendations or procedures may not be suitable for or applicable to all operators. Operators should consider their own circumstances, practices and procedures when using this Technical Advisory Procedure.

Operators must comply with the Australian Design Rules (ADRs), the Australian Vehicle Standards Regulations, roadworthiness guidelines and any specific information and instructions provided by manufacturers in relation to the vehicle systems and components.

No endorsement of products or services is made or intended. Brand names, where used in this Technical Advisory Procedure, are for illustrative purposes only.

Suggestions or comments about this Technical Advisory Procedure are welcome. Please write to the Industry Technical Council, Australian Trucking Association, Minter Ellison Building, 25 National Circuit, Forrest ACT 2603.

Disclaimer

The ATA makes no representations and provides no warranty that the information and recommendations contained in this Technical Advisory Procedure are suitable for the use by or applicable to all operators, up to date, complete or without exception. Reliance or use upon the information or recommendations is voluntary and the user accepts all risks and responsibility for any such reliance or use and to the maximum extent permitted by law the ATA excludes all liability to any person arising directly or indirectly out of any such reliance or use.

Table of Contents

1) Introduction 4
2) The NVHIM, section 2 - brake adjustment requirements 4
3) Longer stroke brake chambers identification 5
4) Chamber stroke / readjustment lengths 6
5) Identification of stoke on the brake chamber end cap 7
6) Brake chamber stroke length based on chamber band diameter..... 8
7) Correct mounting of chambers with slack adjusters 9
8) Stroke checking tool 10
9) Templates and guides - examples 11
10) Links - service, maintenance and correct setup 12
11) SAE standards for slack adjusters 13
12) Components of an automatic slack adjuster..... 13

Figure 1 Slack adjusters take many shapes and forms to work around other wheel end componentry. Their arms can be offset and at a range of angles
Source: BPW Transpec

1) Introduction

The ATA Industry Technical Council (ITC) developed this Technical Advisory Procedure (TAP) to provide operators with an appropriate understanding the correct adjustment for slack adjusters in association with the National Heavy Vehicle Inspection Manual (NHVIM).

ITC members believe the NHVIM is open to interpretation and as a result, open to the possibility of inappropriate defecting of vehicles by enforcement officers. The chamber's push rod may not have an "over-stroke" indicator mark and the compliance of the slack adjuster to push rod angle could be misinterpreted. Additionally, the increasing use of longer stroke brake chambers can also add to the confusion as to what is 80% of its travel and correctly identifying the stroke of a particular actuator or chamber. Automatic slack adjuster suppliers have confirmed that may need to travel past the optimum 90 degree angle for maximum brake force before they adjust up.

2) The NVHIM, section 2 - brake adjustment requirements

The NVHIM notes the following regarding defecting a brake system due to adjustment and potential for over stroking.

2.2 Check brake adjustment

Reasons for rejection

a) With any brake fully applied, a brake adjustment indicator runs out of travel or indicates that adjustment is necessary

b) Brake chamber push or pull rods move more than 80% of their maximum stroke when the brakes are fully applied

c) With any brake fully applied, any stroke indicator displays evidence of excessive stroke (known as over-stroking)

Figure 2.2 Example of excessive stroke/over-stroking

Note: Not all push and pull rods will have a stroke indicator.

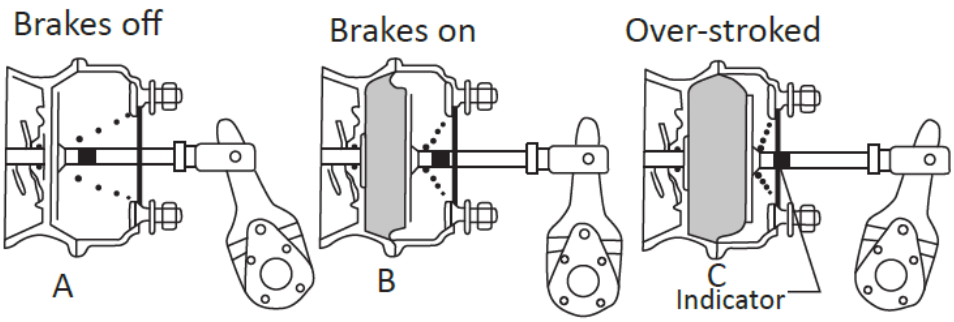

Figure 2 Excerpt from NHVIM, section 2 - brakes.[1]

[1] https://www.nhvr.gov.au/safety-accreditation-compliance/vehicle-standards-and-modifications/nhvim

3) Longer stroke brake chambers identification

Over recent years longer stroke brake chambers have become standard on a range of truck models. These chambers are not always easily identifiable and they don't all have the same stroke. A mismatch of chambers may lead to brake imbalance issue across an axle, particularly during a Roller Brake Testing. Refer to the applicable TAP for the detailed roller brake testing procedure. Component suppliers always recommend fitting matching chambers and other componentry.

Warning

Ensure components are identical across an axle and, optimally, within an axle group.

Identify long stroke brake chambers by two of the following methods (Refer to SAE J1817 for details):

- Trapezoidal shaped tag with the stroke information detailed (figure 3)
- Square boss around the chamber's air supply port or ports (figure 4)
- Embossed or cast-in service instruction advising chamber details (figure 5)

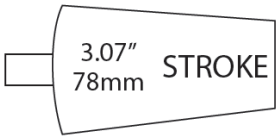

Figure 3: Reference tag

Source: Haldex

Figure 4: Boss shape

Haldex

Figure 5: Body marking

BPW Transpec

4) Chamber stroke / readjustment lengths

Long stroke brake chambers are available in 3 classes or bands, based on their increase in stroke from the standard rated brake chamber stroke.

	Class I	Class II	Class III	
An actuator having a stroke of	6.4 to 12.4 mm	12.7 to 18.8 mm	19 mm	greater than standard rated stroke
	0.25 to 0.49”	0.50 to 0.74”	0.75”	

Table 1: Long stroke actuator classes. Refer to SAE J1817 for details.

Table 2 lists the SAE recommendation for both the stroke length and maximum adjustment limit for brake chambers.

Chamber Type or size	**Standard stroke brake chambers**				**Long stroke brake chambers**											
					Class I Std. + 0.25" (6.4 mm)*				**Class II Std. + 0.50" (12.7 mm)***				**Class III Std. + 0.75" (19.0 mm)***			
	Standard Rate Stroke		Brake adjustment limit		Minimum Rate Stroke		Brake adjustment limit		Minimum Rate Stroke		Brake adjustment limit		Minimum Rate Stroke		Brake adjustment limit	
	in	mm	in	mm	in	mm	in	mm	in	mm	in	mm	in	mm	in	mm
9	1.75	44.5	1.38	35.1	2.00	50.8	1.50	38.1								
12																
16	2.25	57.2	1.75	44.5	2.50	63.5	2.00	50.8	2.75	69.9	2.25	57.2				
20													3.00	76.2	2.50	63.5
24	2.50	63.5	2.00	50.8	2.75	69.9	2.25	57.2	3.00	76.5	2.50	63.5				
30																
36	3.00	76.2	2.25	57.2	3.25	82.6	2.62	66.5	3.50	88.9	2.75	69.9				

Table 2: Recommended brake chamber stroke and adjustment limit. Refer to SAE J1817 for details.

Note

- * Nominal increase in stroke over the standard chamber. See table 1 for the increase in stroke range for each class of longer stroke brake chamber.
- Imperial dimensions are primarily used as the reference standard is the US SAE. Metric dimensions conversions are based on 1” = 25.4 mm, rounded to the nearest 1/10 (tenth) mm.
- Table 2 above indicates minimum design stroke of a chamber, so the actual stroke could be more and the chamber would still comply with the class.

5) Identification of stroke on the brake chamber end cap

If there is no tag detailing stroke reference information (refer to figure 2), the chamber may be embossed with the reference for the rated stroke as either an alpha character or measurement mark in the highlight location indicated below. Refer to table 2 for details.

Figure 6: Rated stroke marking location for either service or combination spring brake chamber. Source Bendix

Rated stroke marking	Actuator rated stroke		Brake adjustment limit	
A	1.50”	38.1 mm	1.25”	31.8 mm
B	1.75”	44.5 mm	1.38”	35.1 mm
C	2.00”	50.8 mm	1.50”	38.1 mm
D	2.25”	57.2 mm	1.75”	44.5 mm
E	2.50”	63.5 mm	2.00”	50.8 mm
F	3.00”	76.2 mm	2.50”	64.5 mm
G	3.25”	82.6 mm	2.62”	66.5 mm
H	3.50”	88.9 mm	2.75”	69.9 mm
X.XX	other		X.XX”	XX mm*

Table 3: Rated stroke located on brake chamber end cup. Refer to SAE J2899 for details.

Note

- Imperial dimensions are primarily used as the reference standard in the US SAE. Metric dimensions conversions are based on 1” = 25.4 mm, rounded to the nearest 1/10 (tenth) mm.

6) Brake chamber stroke length based on chamber band diameter

Alternatively, if none of the previous methodologies can be applied, table 4 can be used to interpret the stroke length for standard brake chamber from the service band clamp diameter.

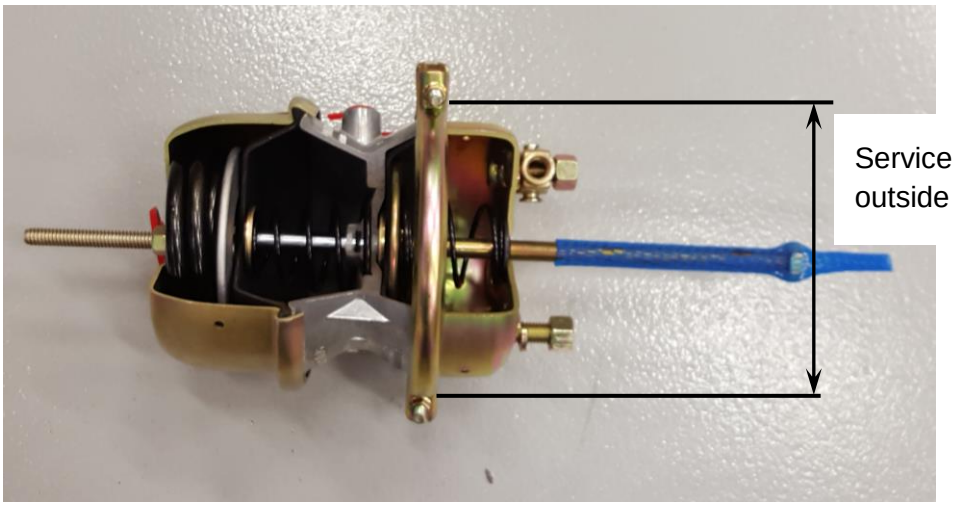

Figure 7: Brake chamber service band

Standard type S-Cam actuators	Stroke length for a standard rated stroke		Chamber service clamp band outside diameter	
			±0.20”	± 5 mm
9	1.75”	44.5 mm	5.38”	137 mm
12			5.81”	148 mm
16	2.25”	57.2 mm	6.50”	165 mm
20			6.91”	176 mm
24	2.50”	63.5 mm	7.34”	186 mm
30			8.22”	209 mm
36	3.00”	76.2 mm	9.13”	232 mm

Table 4: Rated stroke located on chamber end cup. Refer to SAE J2899 for full details.

7) Correct mounting of chambers with slack adjusters

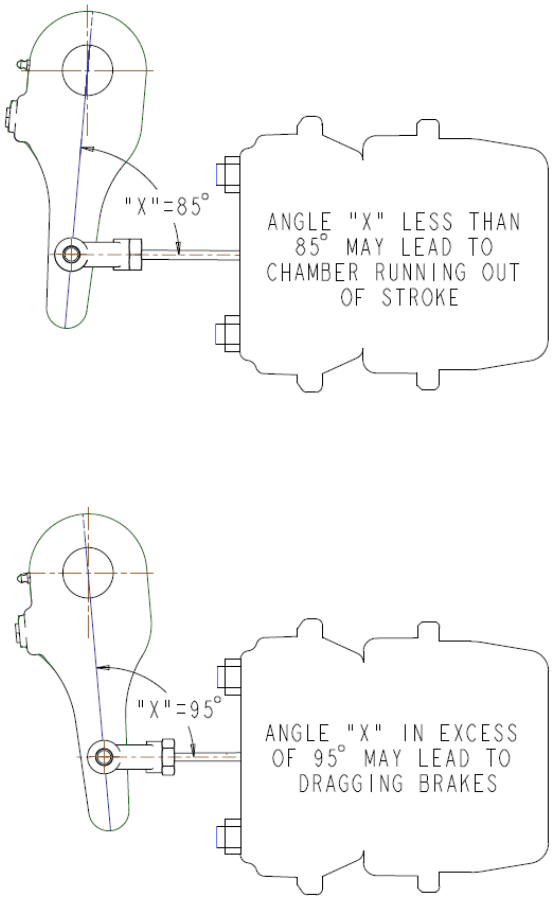

After adjustment, if the pushrod is cocked either up or down (see figure 8), the pushrod should not bind when the brakes have been applied.

If the pushrod is binding due to misalignment, check if the chamber was mounted in the proper mounting holes and that the proper slack adjuster arm length is being used. Different manufacturers have different mounting brackets. If the misalignment cannot be corrected, consult the foundation brake supplier for verification of the correct mounting position.

Incorrect pushrod length can also cause misalignment.

The angle between the pushrod and slack adjuster when either the park brake is applied or full brake pedal application has been achieved (80-90 psi or 550-620 kPa brake system air pressure), should ideally be 90º, with a ±5º tolerance.

The application of this tolerance has negligible impact on the brake system performance with 99.6% of the available force still available. Refer to figure 8.

Figure 8: Alignment of chamber and slack adjuster. Source Meritor.

Slack adjusters often have a range of holes to suit different mounting situation. These may zig zag along the arm of the adjuster and as a result, the selected mounting hole may not align with the centre line of the slack adjuster arm. It is important to check against the right reference points.

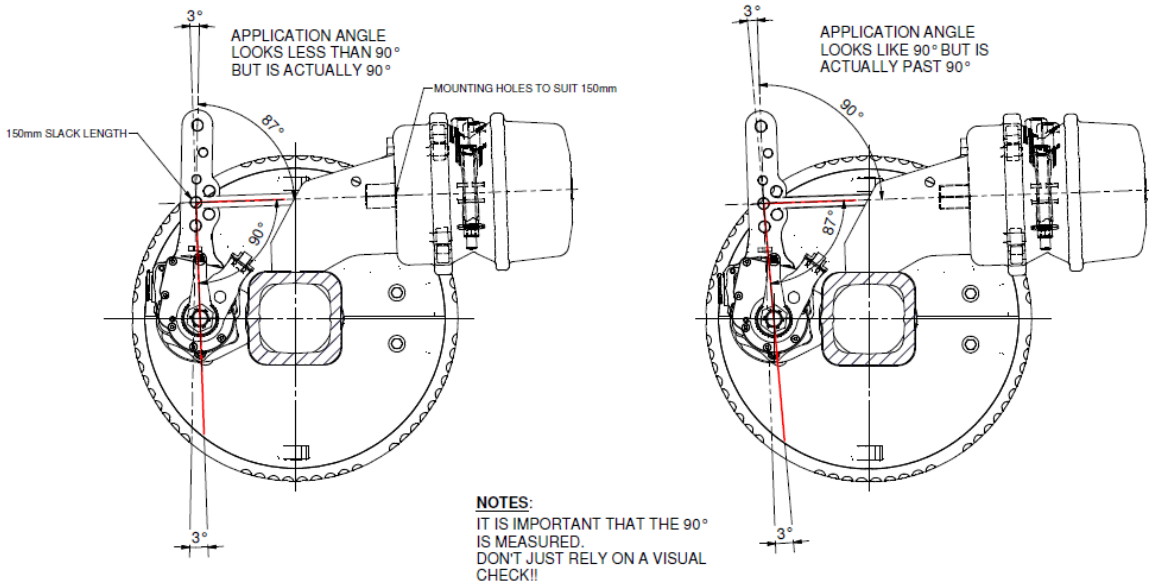

Figure 9: Slack adjuster mounting holes offset to the centre line of its arm. Source BPW Transpec.

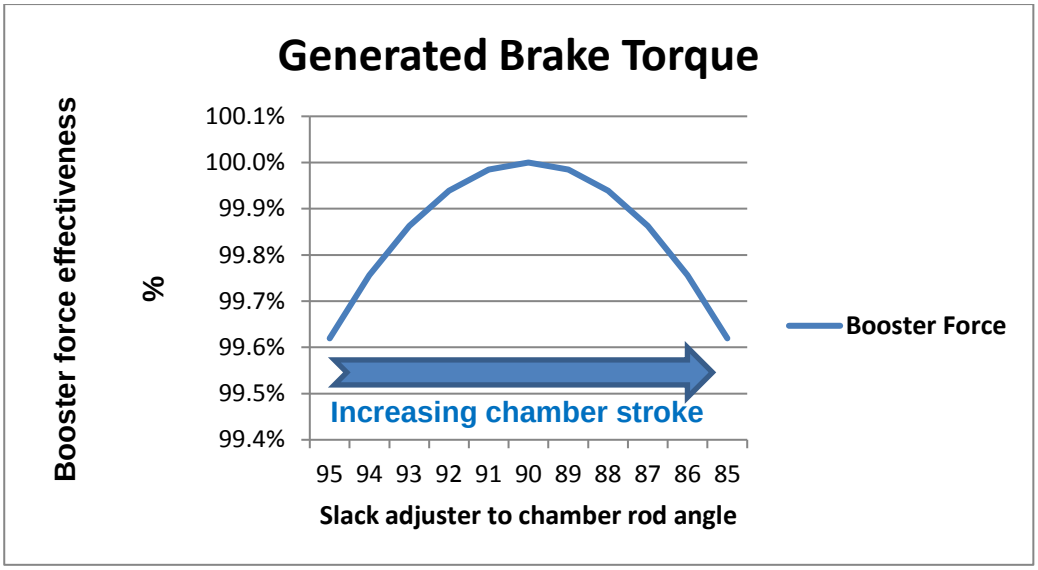

Figure 10: Brake booster applied force versus its angle to the slack adjuster

As the brake linings wear the chamber stroke will increase. For new linings it is best to set the brakes to 95º, which allows them to bed in, and in doing so the brake force will increase as the stroke increases with lining wear. It should be noted that the brake force reduces after 90º and the brakes may need to be more closely monitored.

8) Stroke checking tool

The Meritor SimpleCheck tool is a simple and easily used tool available in a range of shaft sizes. Other suppliers will have a similar tool.

Install it when the brakes are released onto the push-rod hard against the chamber. Apply the brakes to measure the travel distance. In the case of Meritor chambers/actuator, if the disc moves past the end of brake chamber mounting studs after the brakes have been operated, investigate further.

Warning

During this test, truck/combination should be parked on level ground with wheels chocked to prevent the unit from rolling.

Figure 11: SimpleCheck tool. Chamber/actuator stroke checking tool. Source Meritor

Figure 12: SimpleCheck tool in position on the push-rod of the brake chamber with the brakes applied. Source Meritor

9) Templates and guides - examples

a) Simple fabricated slack adjuster length checking.
With a pointed M10 screw added, the guide is able to check the slack adjuster length.

b) Meritor automatic slack adjuster checking tool - example
This tool can check slack adjuster length and adjustment.

c) Push rod / slack adjuster angle template
Simple template can be cut out or folded to provide a very basic guide to the angle for the chamber's push rod to slack adjuster. Optimally, it is 90° when brakes applied.

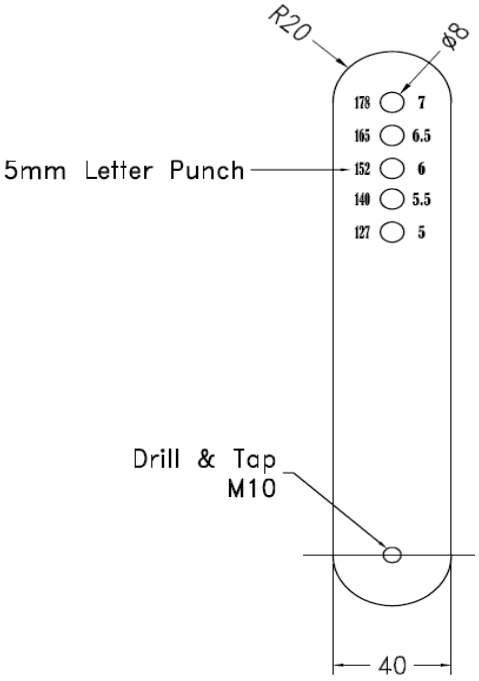

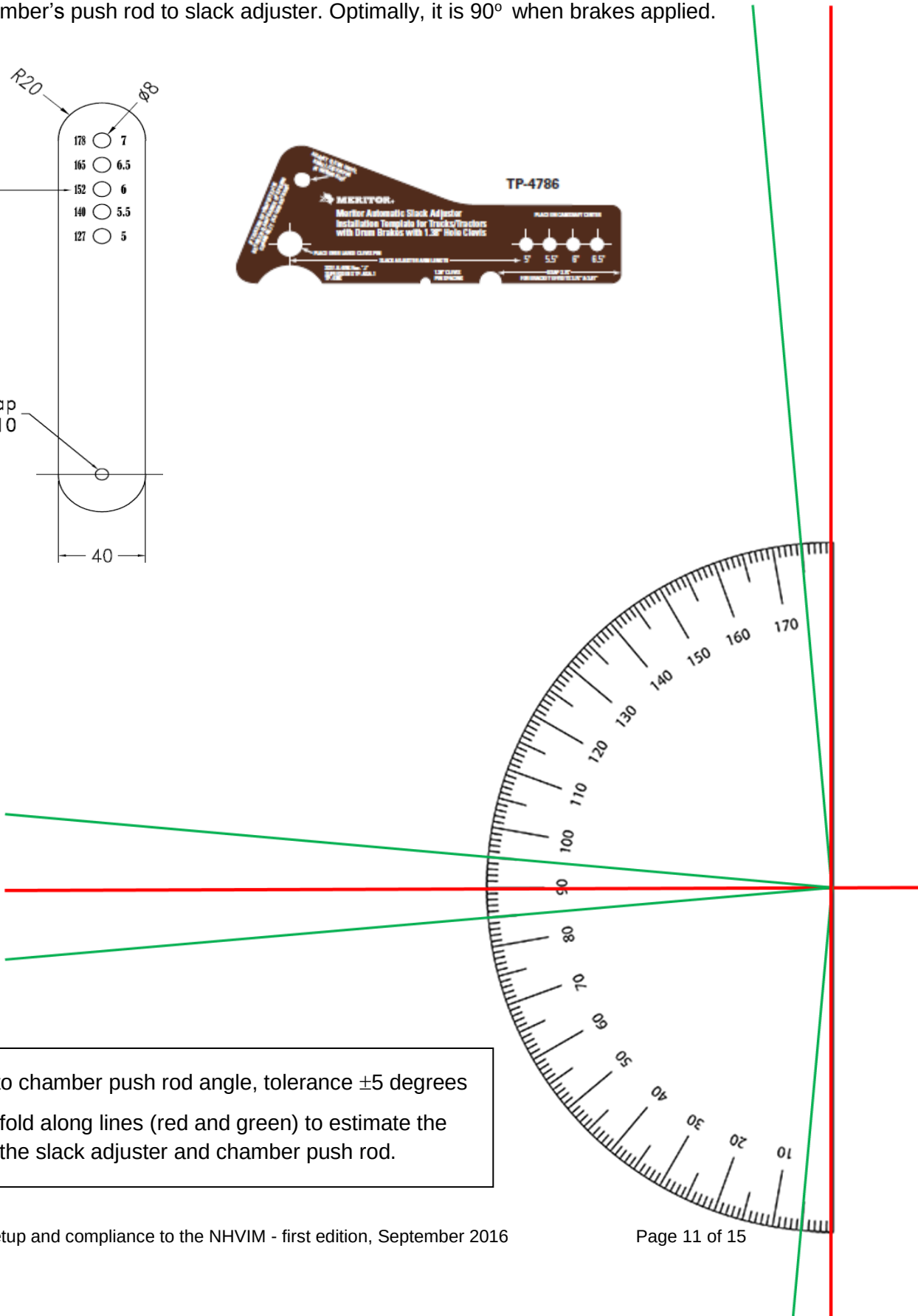

Slack adjuster to chamber push rod angle, tolerance ±5 degrees

Print page and fold along lines (red and green) to estimate the angle between the slack adjuster and chamber push rod.

10) Links - service, maintenance and correct setup

There are a range of suppliers of both manual and automatic slack adjusters, all with unique designs and methods of function. As a result it is not possible to provide a generic set of adjustment guidelines. All slack adjusters (manual and automatic adjustment) will require regular and routine service and maintenance to ensure the brakes are operating correctly. Please contact the supplier for installation requirements and service/maintenance requirements or click on the links below. These instructions must be followed.

General information
www.bpwtranspec.com.au

Specific supplier information
Gunite slack adjusters
www.accuridewheelendsolutions.com

www.haldex.com

www.knorr-bremse.com.au

www.meritor.com

Figure 13: links to automatic slack adjuster supplier service/maintenance documentation.
Note: links may not operate correctly if the supplier changes the documents location or updates the name.
If this occurs, search within their website.

11) SAE standards for slack adjusters

Slack adjusters are often seen as a commodity with the lowest priced option being fitted. However, there has been concern that inferior quality components are available in the Australian market don't live up to operator expectation for durability and operational life. A reputable supplier or brand will be able to provide compliance to the applicable following standards listed below.

SAE Standard	Title
SAE J1512	Manual slack adjuster performance requirements
SAE J1461	External automatic slack adjuster test procedure
SAE J1513	Manual slack adjuster performance requirements
SAE J1462	External automatic slack adjuster test procedure

Table 5: Standards applicable for slack adjusters

12) Components of an automatic slack adjuster

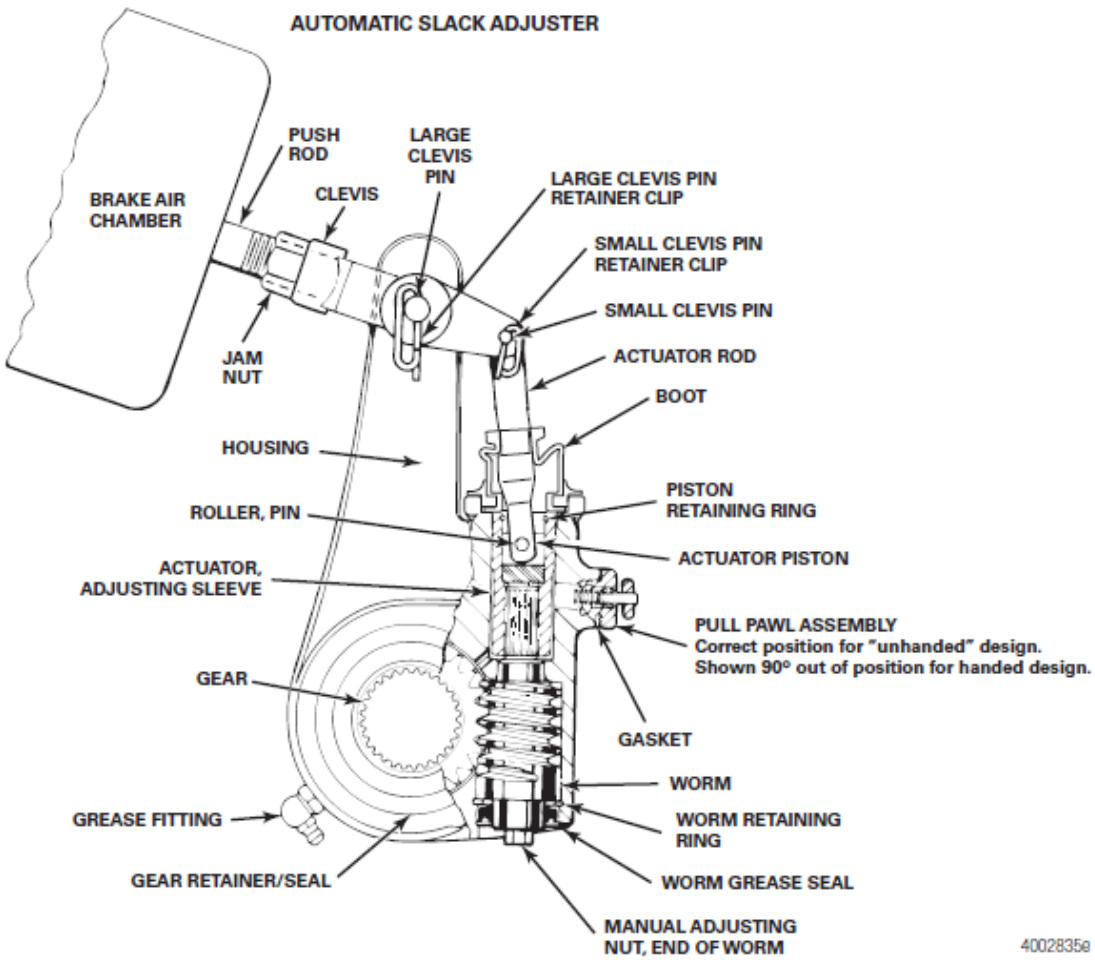

Figure 14: Section of an automatic slack adjuster in the retracted position.
Source Meritor.

TAP development process, history and validation

The process

The ITC will approve the need for the creation of a new TAP or the triennial routine review of an existing TAP. The nominated editor(s), who are listed below, with support of the ITC and specialist industry technical members as required, will agree on the TAP content with approval by a majority vote of ITC members. A suitably qualified and experience ATA appointed peer reviewer will further review the publication and if necessary, recommended changes. These changes will then be reviewed and approved again by a majority vote of ITC members before the document is released.

Document version control

Edition	Date	Nature of change / comment	Editor(s)
First	September 2016	Initial release	Chris Loose, ATA, Senior Advisor Engineering

The next edition is expected on or before August 2021.

Drafting committee, first edition

Member	Organisation	Title	Qualification
Ryan Davies	Meritor Australia	Engineering Manager	Engineer

Peer review

Edition	Date	Peer Reviewer	Organisation/qualifications
First	August/2016	Ian Thomson	BPW Transpec, Engineering Manager - Trailer Equipment Division, Engineer

INDUSTRY TECHNICAL COUNCIL

About the ATA Industry Technical Council:

The Industry Technical Council (ITC) is a standing committee of the Australian Trucking Association (ATA). The ITC's mission is to improve trucking equipment, its maintenance and maintenance management. The ITC was established in 1995.

As a group, the ITC provides the ATA with robust professional advice on technical matters to help underpin the ATA's evidence based policymaking. It is concerned with lifting technical and maintenance standards, improving the operational safety of the heavy vehicle sector, and the development of guidelines and standards for technical matters.

ITC performs a unique service in the Australian trucking industry by bringing operators, suppliers, engineers and other specialists together in a long-term discussion forum. Its members provide expert and independent advice in the field to inform the work of the ITC. The outcomes from ITC benefit all ITC stakeholders and the heavy vehicle industry at large.

The ITC operates under the Australian Trucking Association's Council, which formulates industry policy for implementation by the organisation.

Joining ITC:

We welcome applications to join the ITC. For further information,

please call the ATA (02) 6253 6900

email ata@truck.net.au

or download information from the ATA website www.truck.net.au follow the links under the members tab to join here.